YETDA BACKLIGHT OF TFT

Part Number	Chip			cd/㎡			VF (V)		
	Material	Emitter Color	λD(nm)	at IF=mA	Typ.	Max.	at IF=mA	Min.	Typ.

96.4 x 55.4mm LED Side Backlight for TFT & CSTN LCD

Unit:mm

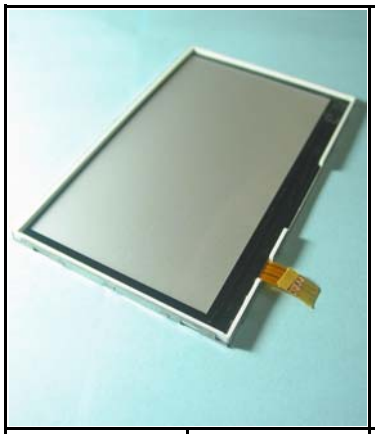

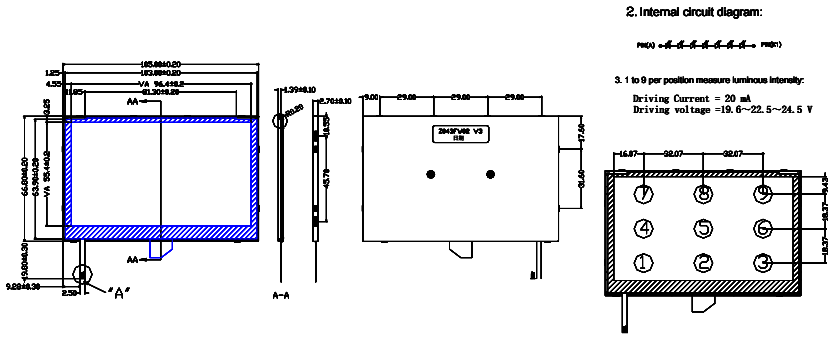

HCG8454W	InGaN	White	X:0.29 Y:0.30	20	3000	3300	20	22.5	24.5

71 x 53.5 LED Side Backlight for TFT & CSTN LCD

Unit:mm

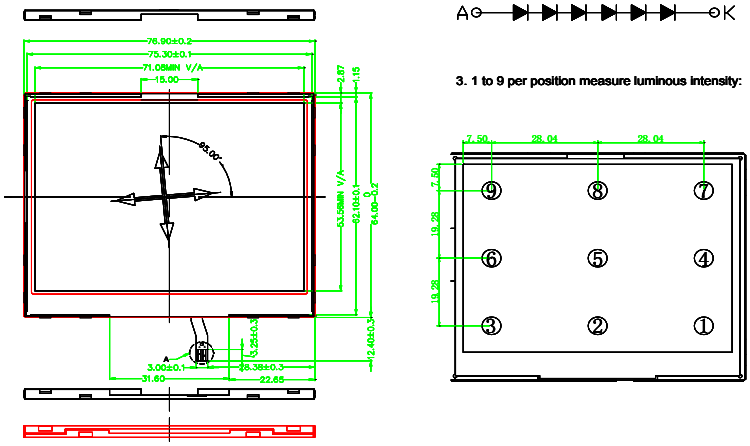

HCG8498W	InGaN	White	X:0.29 Y:0.30	20	3000	3300	20	20.4	21.5

Light Sources: SMD	
Brightness: 1500-8000cd/m^2	
Light Guide: 0.35-0.7-1.0mm	
Size: 3"-19"	
Color	λ D
White	X:0.26-0.32 Y:0.26-0.32
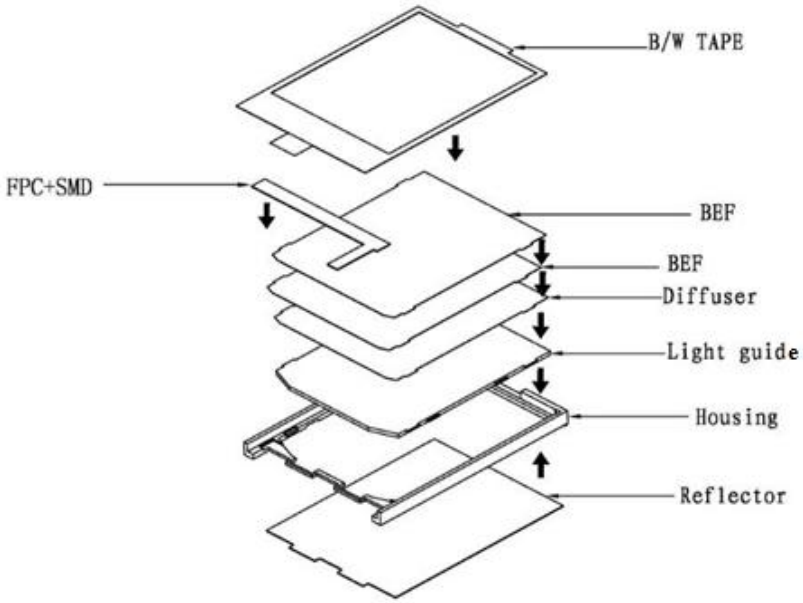
Backlight of TFT